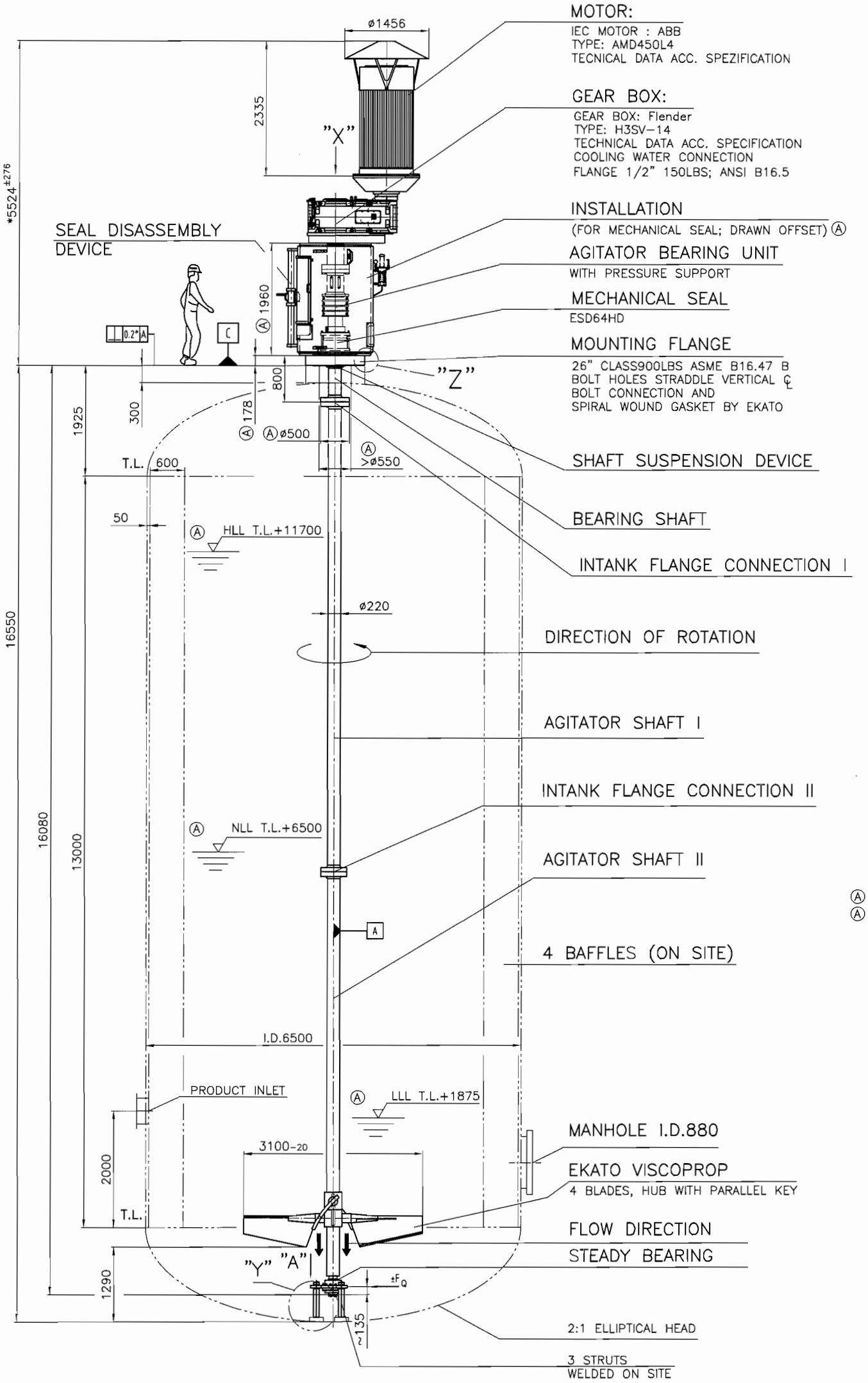

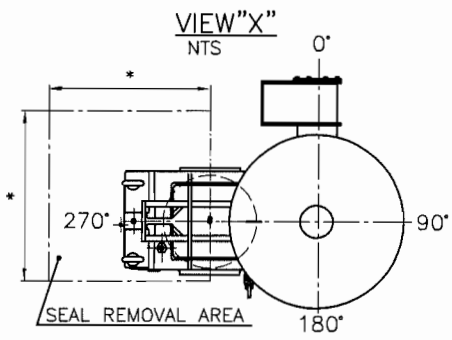

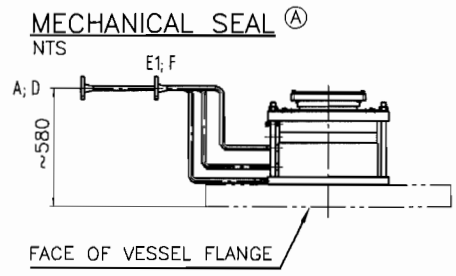

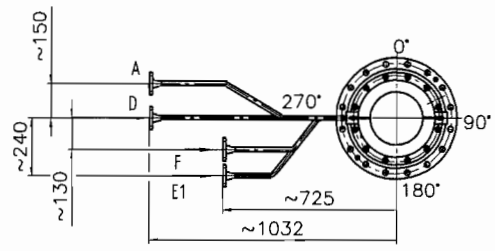

DETAIL MECHANICAL SEAL

Ⓐ A =1"; 600LBS; RF ANSI B16.5 – BUFFER FLUID INLET
Ⓐ D =1"; 600LBS; RF/ANSI B16.5 – FLUSHING
E1=1/2"; 150LBS; RF/ANSI B16.5–COOLING WATER INLET
F =1/2"; 150LBS; RF/ANSI B16.5–COOLING WATER OUTLET

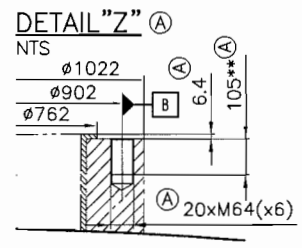

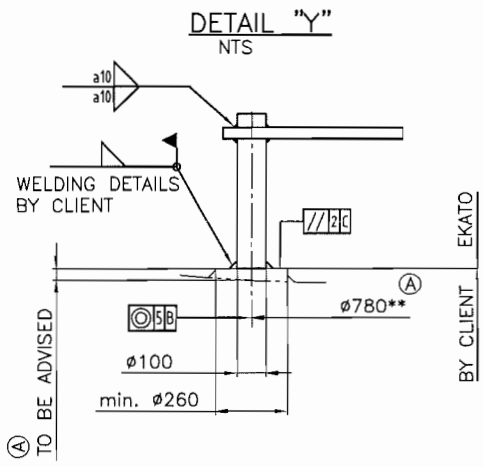

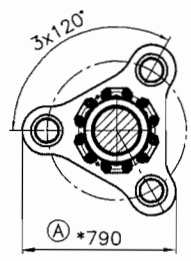

DESIGN LOADS ON BAFFLES		
NATURAL FREQUENCY	>15 [Hz]	
ELEVATION FROM T.L.	max. LOAD [kN/m^2]	FATIGUE [kN/m^2]
to 994	11.1	3.3
994 to top	3.1	0.9

CAUTION

DYNAMIC LOADS AS WELL AS LIMITS FOR NOZZLE DEFLECTION AND NATURAL FREQUENCIES TO BE CONSIDERED AS DESIGN CRITERIA FOR VESSEL AND INTERNALS!

		min	max	stat	start	average
Axial force	F_A [N]	−140000	−120000	−170000	0	−130000
Lateral force	F_Q [N]	−1800	1800	0	0	−19000 Ⓐ
Bending moment	M_B [Nm]	49100	68600	58900	0	58900 Ⓐ
Torque	M_T [Nm]	49000	91000	0	210000	70000
Lateral force Steady bearing	F_Q [N]	−20000	20000	0	0	0

The dynamic part of the lateral forces and of the bending moments is revolving.
The calculation of the dynamic loads is done without regard of the vessel pressure.
The agitator support must be checked by the customer with respect to strength and stiffness.
Limit for the angular deflection of the agitator support during operation: +/− 0,05°.
The agitator nozzle must be arranged horizontal.
Allowable deviation: 0.2° (3.5mm/m) (field arrangement) 容许偏差
The vessel with attachments and components must be designed to avoid resonances caused by agitator operation.

NATURAL FREQUENCY OF VESSEL >10Hz
PRODUCT WETTED PARTS = 1.4541/(EQ.AISI 321)
INTANK BOLT CONNECTIONS 1.4541 WITH LOCKING PLATES

PARTS LIST NO.: 20190265

** TO BE CONFIRMED
* ON HOLD

SHOWN IN PRINCIPLE

CLIENT: XIANG LU
PROJECT: XLP2
ITEM: A-521-1/2 1st CRYSTALLIZER
SERIAL No.: 79775 / 010-020

(A) Revision	17.03.2011	GIG/Bo	
Changes	Date	Name	

This drawing is private and confidential communication and the property of EKATO
It must not be copied or lent without consent of EKATO

	Date	Name
Created	04.01.11	ZG
Checked	05.01.11	ROE
Std. Checked		

Scale: 1:40 NTS

Type : HWL2220-NS

EKATO

Name : EKATO AGITATOR
GENERAL ARRANGEMENT DRAWING

Drawing No.: 930-20192216-00 A

Replacement for :
Replaced by :

20192216-A

A1